CARRON
PHOENIX

Rosolina J Spout | 115.0689.772

The Rosolina J-Spout's slim-line body produces a low profile appearance, perfect for all contemporary sink styles

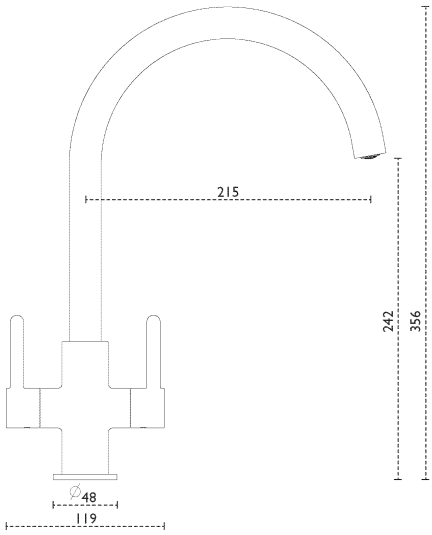

Tap Details

Finish:	Brass
Tap Type:	Two Lever
Valve Type:	Ceramic Cartridge
Tap Operation:	Dual lever
Water Pressure:	Medium Pressure 0.5-1.2 bar

Tap Dimensions

Tap Height:	356mm
Spout Reach:	215mm